Haven HASS6636 66" x 36" x 21"

SOOTHING SOAK SERIES

Hydro Massage
Your Health ... Our Passion

PRODUCT NUMBER: HASS6636 D

TECHNICAL SPECIFICATIONS	
Drain	End drain
Pump Location(s): Select 1	Std. = Standard / Alt LF/RF Optional
Bath Weight (empty)	145 lbs
Gallons to Operate	43-61
ELECTRICAL SPECIFICATIONS	
Motor/Pump	(1) 115v 20AMP GFCI Circuits
Inline Stainless Steel Heater	N/A

BATHERS: 1	
INSTALLATION	
•	DECK (D)
	UNDER MOUNT (U)
	ALCOVE (A)
	FREESTANDING (F)
	CLAWFOOT (L)
	PEDESTAL (P)

STANDARD FEATURES & ACCESSORIES for SOOTHING SOAK SERIES BATHS _____

PUMPS
WhisperFlo Heat Pump
Quiet Pad Anti-Vibration Mounted Pump

CONTROLS
Air Switch On/Off Control(s) for Hydro Pump

PURITY
HydroCleanse

STANDARD ACCESSORIES
EZ Clean Cast Acrylic
FDA Recipe Non-Toxic Food & Beverage Grade Plumbing (primarily)
30 Point Quality Assurance Factory Test
EZ Level Adjustable Legs

REQUIREMENTS
Pump Locations: Select 1
Electrical: one 115v 20AMP GFCI Circuits
Tub should not be supported by the lip in any way. Level tub & screw or glue EZ Level adjustable legs to sub floor.
CUT OUT DIMENSIONS:
OVALS: A template will be provided
RECTANGLES: Subtract 1" to 1.5" from length & width for hole cut out size

EZ CLEAN CAST ACRYLIC LIMITED LIFETIME WARRANTY c UL us **ANSI**

OPTIONAL FEATURES & ACCESSORIES
(Please type in the box below)

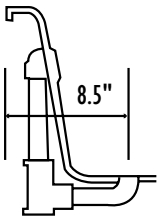

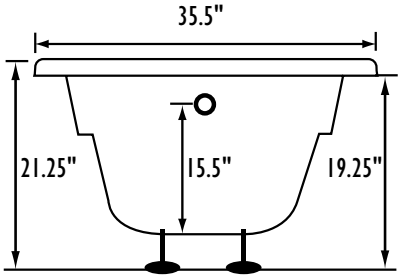

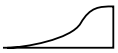

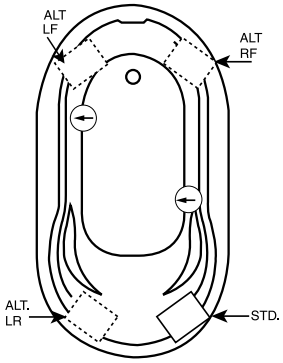

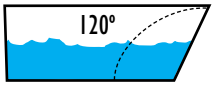

Backrest angle

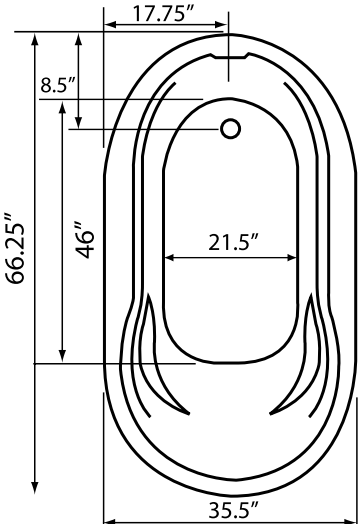

Bath include EZ Level Legs
INSTALLATION WILL NOT REQUIRE MORTAR BEDDING

Some standard & most alternate pump locations may stickout past perimeter of the bath 1"-3". NOTE: Graphics may not be to scale. Specifications and features are subject to change without notice and are ± .25". All final measurements should be taken from tub on site. Access 18"x 18" or larger is required for each pump. Consult your contractor for installation requirements.

Hydromassage Products LLC • 303-341-1845 | FAX: 303-341-1850 • www.hydromassageproducts.com