Reward 7248SD | Bathtub Only

Product Number: RETO7248SDFS 72" x 48" x 25"

STANDARD & OPTIONAL ACCESSORIES

DRAINS & OVERFLOWS INFORMATION

- Overflow: Integral Slotted in Acrylic - no finishes available.
- Bath Drain: Pop up: Included- Polished Chrome or Brushed Nickel.
  Optional - White, Biscuit, Black, Polished Nickel, Oil Rubbed Bronze.
- In Floor Drain EZ Fast Connect (optional)

FAUCET INFORMATION

- Deck Mount or Floor mount (not included & no faucet holes drilled)
- Access Panel recommended for Deck faucet (optional)
- Floor mount verify spout distance

OPTIONAL

- Chromatherapy
- Underwater light
- Deluxe cushion pillow
- Sushi body cushion pillow
- Cozy heated back rest

Some optional items above will require an electrical circuit and access panel. Not all options available on all models. Check price sheet to verify.

ADDITIONAL INFORMATION

6 ½" or more space required to access equipment panel. Tub may also need to be shifted or disconnected in some situations.

Access panel equipment design and location may vary based on model.

Your qualified installer must water test and run all equipment before leaving your home to ensure proper operation and validate warranty.

TECHNICAL SPECIFICATIONS

Side drain

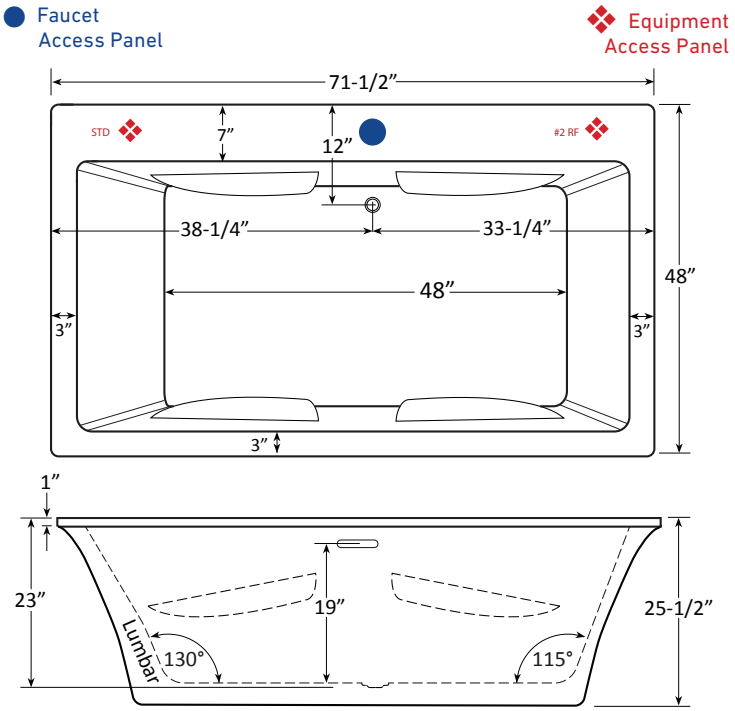

Specifications and features are subject to change without notice and are + .25". All final measurements should be taken from tub on site.

HydroMassage Products LLC • 303-341-1845 • Fax: 303-341-1850 • www.hydromassageproducts.com